OVAL GEAR METER

Model **295x**

Model 2950

Model 2951

KYTOLA® Oval Gear Meter models 2950 and 2951 are designed for the accurate measurement and monitoring of lubrication oils and other viscous fluids to meet the needs of process industries.

The flow meter consists of two elliptical gears which the flow rotates. The rotation speed is proportional to the flow rate. This rotation is picked up by an inductive proximity sensor or a coil sensor (compatible with KYTOLA® measuring station) and the pulse signal can be transferred to indicators, counters or automation systems.

FEATURES

- Several flow ranges
- Large viscosity range 30 - 1000 cSt
- Independent of viscosity changes
- Sturdy construction
- Pulse output

TYPICAL APPLICATIONS

- Lubricant monitoring
- Industrial flow monitoring
- Process control

OPTIONS

- With or without valve
- BSP or NPT -connections
- Alternative sensors

ISO 9001
DNV
CERTIFIED ORGANISATION

2950

Technical data 2950

Model	2950-1-	2950-2-	2950-5-	2950-10-	2950-20-	2950-30-	2950-60-	2950-100-
Output (pulses/l)	820	450	290	126.8	75.8	49.8	22.4	12.4
Weight	265 g	255 g	280 g	1,1 kg	1,1 kg	1,5 kg	3,4 kg	12 kg
Connections	1/4”	1/4”	1/4”	3/4”	3/4”	3/4”	1”	1 1/2”

Gears	Plastic or Brass (depending on range)
Body	Aluminium
Cover	Trogamid-T (* Aluminium)
Seals	Viton®
Sensor	Namur; DIN 19234 (* Other types of inductive prox. sensor)
Max. pressure	10 bar
Max. temp.	+ 80°C
Viscosity range	30 - 1000 cSt
Accuracy	± 5 % of reading

*) Special construction on request

2950 - [ ] - A [ ] [ ] - [ ] [ ]

Sensor

	NAMUR -sensor
D	Without sensor (M12x1 thread)
F	PNP/NPN -sensor (2 -wire)
P	PNP -sensor (3 -wire)
T	NPN -sensor (3 -wire)
C	Coil -sensor (compatible with Kytola measuring stations)

Connections

	BSP - threads
N	NPT - threads

Cover

A	Aluminium cover
T	Trogamid cover

Gears

K	Plastic gears (1...5 l/min)
P	Brass gears (10...100 l/min)

Flow range

1	0,1 - 1 l/min
2	0,2 - 2 l/min
5	0,5 - 5 l/min
10	1 - 10 l/min
20	2 - 20 l/min
30	3 - 30 l/min
60	6 - 60 l/min
100	10 - 100 l/min

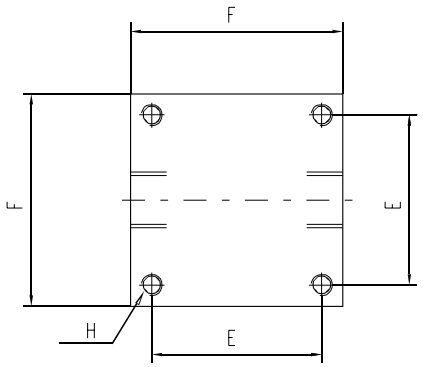

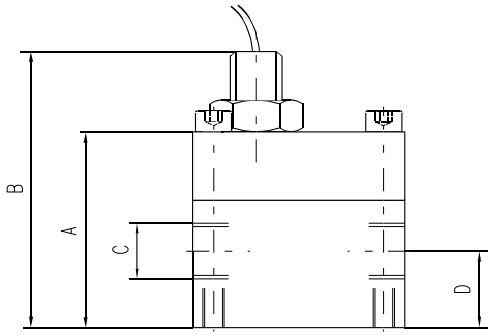

	A	B	C	D	E	F	H
2950-1-AKT	41	60	BSP ¼”	13	40	50	M5
2950-2-AKT	41	60	BSP ¼”	13	40	50	M5
2950-5-AKT	46	65	BSP ¼”	18	40	50	M5
2950-10-APT	67	82	BSP ¾”	27	60	80	M8
2950-20-APT	67	82	BSP ¾”	27	60	80	M8
2950-30-APT	87	102	BSP ¾”	29	60	80	M8
2950-60-APT	97	107	BSP 1”	42	92	120	M10
2950-100-APT	109	109	BSP 1½”	36	160	200	M12

MANUFACTURER

Kytola INSTRUMENTS

KYTOLA OY • Olli Kytolan tie 1
P.O. Box 5 • FI-40951 MUURAME • FINLAND
Phone +358 207 7906 90 • Fax +358 14 631 419
E-mail sales@kytola.com • www.kytola.com

LOCAL REPRESENTATIVE

2951

Technical data 2951

Model	2951-1-	2951-2-	2951-5-	2951-10-	2951-20-	2951-30-	2951-60-	2951-100-
Output (pulses/l)	820	450	290	126.8	75.8	49.8	22.4	12.4
Weight	910 g	900 g	880 g	1,8 kg	1,8 kg	2,5 kg	4,9 kg	13,5 kg
Connections	1/4”	1/4”	1/4”	3/4”	3/4”	3/4”	1 1/2”	1 1/2”
Gears	Plastic or Brass (depending on range)							
Body	Aluminium							
Cover	Trogamid-T (* Aluminium)							
Valve	AISI 316							
Seals	Viton®							
Sensor	Namur; DIN 19234 (* Other types of inductive prox. sensor)							
Max. pressure	10 bar							
Max. temp.	+ 80°C							
Viscosity range	30 - 1000 cSt							
Accuracy	± 5 % of reading							

*) Special construction on request

2951 - [ ] - A [ ] [ ] - [ ] [ ]

Sensor

	NAMUR -sensor
D	Without sensor (M12x1 thread)
F	PNP/NPN -sensor (2 -wire)
P	PNP -sensor (3 -wire)
T	NPN -sensor (3 -wire)
C	Coil -sensor (compatible with Kytola measuring stations)

Connections

	BSP - threads
N	NPT - threads

Cover

A	Aluminium cover
T	Trogamid cover

Gears

K	Plastic gears (1...5 l/min)
P	Brass gears (10...100 l/min)

Flow range

1	0,1 - 1 l/min
2	0,2 - 2 l/min
5	0,5 - 5 l/min
10	1 - 10 l/min
20	2 - 20 l/min
30	3 - 30 l/min
60	6 - 60 l/min
100	10 - 100 l/min

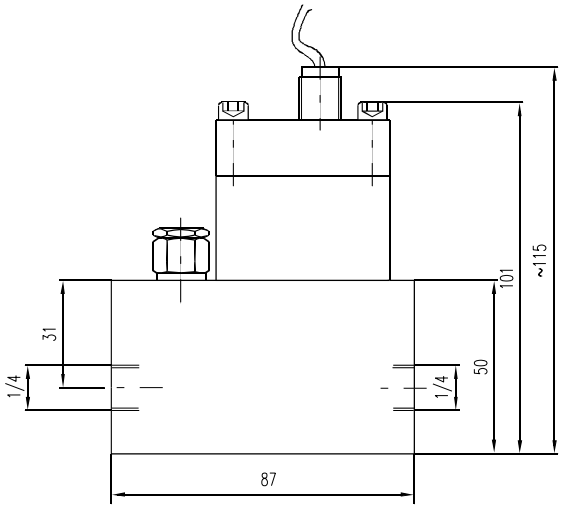

2951-2…5-AKT

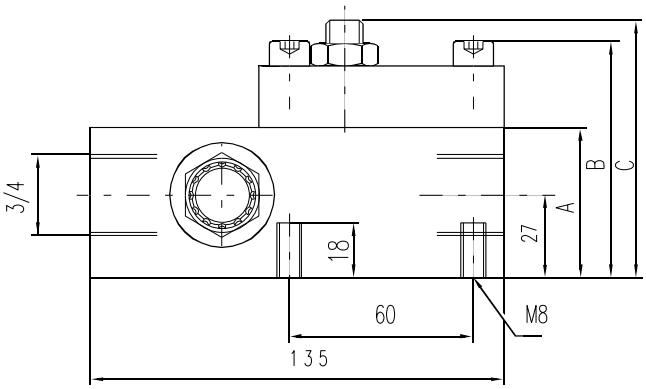

	A	B	C
2951-10-APT	49	77	82
2951-20-APT	49	77	82
2951-30-APT	69	97	102

MANUFACTURER

Kytola INSTRUMENTS

KYTOLA OY • Olli Kytolan tie 1
P.O. Box 5 • FI-40951 MUURAME • FINLAND
Phone +358 207 7906 90 • Fax +358 14 631 419
E-mail sales@kytola.com • www.kytola.com

LOCAL REPRESENTATIVE